Acknowledgement

The successful completion of phase-1 of this project would be incomplete without complementing those who made it possible and whose guidance and encouragement made our efforts successful.

It is great pleasure and respect that we acknowledge our sincere thanks and deep sense of gratitude to our guide **Prof.K.D.Aswale** , and our project Co-Ordinator **Smt.S.B.Wadawadagi**, Department of Mechanical Engineering for giving us the opportunity to carry out the project work. Their professional ethics and qualities is source of inspiration throughout our life.

We would also like to acknowledge our sincere gratitude to **Dr.G.B.Rudrakshi**, Head of the Department of Mechanical Engineering for his consistent encouragement towards the successful completion of the project work.

We also acknowledge our sincere gratitude to our beloved Principal **Dr. S.S.Injagneri**, whose constant source of inspiration throughout the completion of study period.

We are also thankful to all Teaching and Non-Teaching staff of the Department of Mechanical Engineering, Basaveshwar Engineering Collage, Bagalkot for their sincere and valuable guidance towards the completion of the project work.

With love, we thank our Parents and Friends for their unwavering support during the completion of project work.

Lastly, we would like to extend our sincere thanks to all who helped directly or indirectly in the successful completion of our project.

Project Associates,

Pooja Kanavi

Tohid Hanagandi

Udayakumar Jewoor

Vijay P Badiger

Mechanical Engineering

BEC, Bagalakot

Abstract

Generally, many risky, unmanageable and various tasks are difficult to handle by human. Thus, there is need for something, which can be physically present and handle the task. So, robot can be much effective and useful option for such risky tasks. Nowadays in industries, medical, colleges, home appliances, restaurants, military and defense, robot plays very important role and make the task easier and efficient.

The main aim of defense is to guard the border and to ensure that no infiltrators or smuggler enters our country. Defense is deployed in extremely hard and sensitive areas at border as well as for internal security duty. Keeping in view the area of responsibility given to defense and availability of manpower, sometimes it is not at all possible to guard some vulnerable point round the clock, at that time it becomes imperative to develop an electronic system through which the weapon can been operated remotely or automatically. To overcome this problem, we have designed a unique system i.e., remote controlled / auto firing device which can be sited at such places and is capable to fire and also surveillance.

Robot for military application is our project, which deals with remote operation with the help of motorized arm. The circuit can be used to remotely controlled robot electronic gadgets connected to it. The control is done without any wire connection but be means of radio waves, like Bluetooth remote control. The focus of thisproject is to enable ease in operating different operation and gives emphasis on using Bluetooth waves. All operations controlled using mobile using androidBluetooth application.

CONTENTS

Acknowledgement	i
Abstract	ii
List Of Tables	vi
List Of Figures	vii
Chapter 1 Introduction	1
Chapter 2 Literature Review	2
2.1 Problem Statement	3
Chapter 3 Project Objectives	4
3.1 Scope	4
3.2 Objectives	4
Chapter 4 Design Methodology And Components	5
4.1 Design Consideration And Components	5
4.1.1 Power supply	5
4.1.2 Arduino Uno	5
4.1.2.1 How To Use Arduino UNO	6
4.1.2.2 Communication	7
4.1.2.3 Arduino UNO To Atmega328 Pin Mapping	8
4.1.3 Relay	9
4.1.4 HC-05 Bluetooth Module	10
4.1.4.1 How To Use The HC-05 Bluetooth Module	10
4.1.5 Bearing With Bearing Cap	11
4.1.5.1 Construction And Types Of Ball Bearing	12
4.1.6 DC Motor	13
4.1.6.1 Principles Of Operation Of DC Motor	14
4.1.7 Battery	15
4.1.7.1 Lead-Acid Wet Cell	16

4.1.8 Frame Stand 17

4.1.8.1 Mild Steel 17

4.1.8.2 Nut and Bolt 18

4.1.9 Arc Weld 19

4.1.9.1 Arc Weld Equipment 19

4.2 Factors Determining The Choice Of Materials 21

4.3 Types Of Load Acting On The Chassis 22

4.4 Block Diagram 24

4.5 Working Methodology 26

4.6 Design Drawing And Calculation 27

4.7 Calculation And Specification 29

4.7.1 Technical Specifications 29

4.7.2 Basic Shaft Design Formula 30

4.7.3 Shaft Design Problem 31

4.7.4 Chain Drive 33

4.8 Material and cost Estimation 35

4.8.1 List Of Materials 36

4.9 Expected Cost Estimation 36

4.9.1 Material Cost 36

4.9.2 Labour Cost 36

4.9.3 Overhead Charges 37

4.9.4 Total Cost 37

Chapter 5 Results and Discussion 38

Chapter 6 Conclusion and Future Scope 39

6.1 Conclusions 39

6.2 Future Scope 39

References 40

LIST OF TABLES

Table No	Table Name	Page No
1.1	Specification Of Arduino Mega2560	08
1.2	List Of Materials	35
1.3	Cost Estimation	36

LIST OF FIGURES

Figure No	Figure Name	Page No
1	Arduino UNO	6
2	Relay	9
3	HC-05 Bluetooth Model	10
4	Types Of Ball Bearings	12
5	DC Motor	14
6	Lead Acid Battery	16
7	Mild Steel	17
8	Nut And Bolt	18
9	Arc Weld	19
10	Arc Weld Equipment's	19
11	Proposed Block Diagram	24
12	Shaft Design Problem	31

CHAPTER 1

Introduction

Imagine the face of warfare with autonomous robotics: Instead of our soldiers returning home in flag-draped caskets to heartbroken families, autonomous robots—mobile machines that can make decisions, such as to fire upon a target, without human intervention—can replace the human soldier in an increasing range of dangerous missions: from tunneling through dark caves in search of terrorists, to securing urban streets rife with sniper fire, to patrolling the skies and waterways where there is little cover from attacks, to clearing roads and seas of improvised explosive devices (IEDs),to surveying damage from biochemical weapons, to guarding borders and buildings, to controlling potentially-hostile crowds, and even as the infantry frontlines.

These robots would be 'smart' enough to make decisions that only humans now can; and as conflicts increase in tempo and require much quicker information processing and responses, robots have a distinct advantage over the limited and fallible cognitive capabilities that we Homo sapiens have. Not only would robots expand the battle space over difficult, larger areas of terrain, but they also represent a significant force-multiplier each effectively doing the work of many human soldiers, while immune to sleep deprivation, fatigue, low morale, perceptual and communication challenges inthe 'fog of war', and other performance-hindering conditions. But the presumptive case for deploying robots on the battlefield is more than about saving human lives or superior efficiency and effectiveness, though saving lives and clearheaded action during frenetic conflicts are significant issues.

This is an era of automation where it is broadly defined as replacement of manual effort by mechanical power in all degrees of automation. The operation remains an essential part of the system although with changing demands on physical input as the degree of mechanization is increased.

Degrees of automation are of two types, viz. Full and Semi automation. In semi automation a combination of manual effort and mechanical power is required whereas in full automation human participation is very negligible.

CHAPTER 2

Literature Review

Surbhi Verma.et.al [1]: In this paper "Android App Controlled Bluetooth Robot" all performance parameter calculations, analysis and parts selection are discussed. This journal was helpful to study how to control a robot or a machine vehicle by embedding a programmed micro controller which can be operated remotely using Bluetooth application.

R. Hema.et.al [2]: In this paper "Control Robot with Automatic Firing Gun" performance parameter calculations, analysis and parts selection are discussed. Here the controlling of robot without manual intervention is discussed which uses a gun which fires upon a targetfollowing set of rules and codes as programmed earlier using a microcontroller.

Saurav Biswas.et.al [3]: In this paper "Control Robot using Android Phone" performance parameter calculations, analysis and parts selection are discussed. This paper has complete information to control the robot and all its robotic actions and performance using Bluetooth technology from an android phone. This is where we got an idea of controlling our robot vehicle using Bluetooth technology.

Rowjatul Zannat Ishita.et.al [4]: This paper "Bluetooth Based Android Controlled Robot"has presented the development efforts behind the Bluetooth based android controlled robot. The paperbrings together vehicle design and robotic technologies to establish the current state-of-the-artin robotic performance.

H.L.A. Hart and john Grader punishment and responsibility.et.al [5]: Role responsibility considerations may relevant to autonomous and remote weapons system because of the like hoodthat their efficiency will be assessed upon fulfillment of their objectives. This however will fall foul of the disjuncture created between role and outcome responsibility Ultimately exacerbating the diffusion of responsibility. The article continues by illustrating various issues that arise from applying current weapons laws to autonomous and remote weapons system.

HIN-YAN LIU.et.al [6]: In this Paper "leashing the corporate dogs of war" HIN-YAN LIU Law'simpunity: Responsibility and the modern private military company it art, oxford2014

Ibid.PP.10-14, Su also Armin Krishnan.et.al [7]: BBC news mapping US drone and Islamicmilitant attacks in Pakistan in BBC news, 22 July 2010. The independent capability of weapons toinflict violence is apparent in mines for instance, and usually objected to on the grounds of indiscriminateness or existence of threat after the cessation of hostilities.

1.Alexander Gillespie.et.al [8]: This paper "A history of the law of War" Military and strategichistory has been characterized by attempts by the state and its military establishments to monopolizethe material and technological means through which organized force is deployed.

Pater Cane.et.al [9]: This paper "Responsibility in law and morality" Thus, current conceptionsof legal responsibility may be wholly inadequate to address the questions raised by the rise of autonomous and remote weapons systems. This inadequacy becomes all the important when the outcomes of the use of this weapons system rise to the level of international crimes**.**

Jonathan Franklin, Whaling.et.al [10]: The ready availability of this technology enables broad access: anti-whaling fleet and drones and other types of unmanned aerial vehicles are being sent on civilian missions such as crop inspections or marinemammal surveys.

2.1 Problem statement

To design and fabricate a vehicle with camera for surveillance and gun to aim, trigger and fire.

CHAPTER 3

Project Objective

3.1 Scope:

- This capability would permit to send unmanned supply convoys, again minimizing human losses.
- Another way to make military work safer is to send ground robots as pioneers instead of soldiers.
- Cameras transmit images of live scene and can act the vehicle accordingly.
- The military has recognized another advantage, too: more and more robots can do dangerous work that was previously undertaken by humans.
- The military has recognized that automatic devices are far more efficient than the use of human soldiers, as there is a reduced risk of mistakes, and the devices can also be equipped with powerful weapons.

3.2 Objectives:

- To reduce risk in human loss.
- The military has recognized another advantage, too: more and more robots can do dangerous work that was previously undertaken by humans.
- To reduce the fatigue during warfare.
- Another way to make military work safer is to send ground robots instead of soldiers.

CHAPTER 4

Methodology And Components

4.1 Design Considerations and Components

The major components of the vehicle are,

- Arduino Uno
- Relay
- Bluetooth module
- Battery
- D.C. Motor
- Angle frame
- wheel Arrangement
- Gun Arrangement

4.1.1 Power Supply

Here Arduino board, GSM modem operates with 12V DC, LCD display, sensor circuit operates with DC 5V supply, and this supply is provided by regulator of LM7805. 12V step down transformer with rectifier and filter is used to give power supply (or adapter can be use depends upon our requirement). Or buck / boost converter.

4.1.2 Arduino Uno

Arduino Uno is a microcontroller board based on 8-bit ATmega328P microcontroller. Along with ATmega328P, it consists other components such as crystal oscillator, serial communication, voltage regulator, etc. to support the microcontroller. Arduino Uno has 14 digital input/output pins (out of which 6 can be used as PWM outputs), 6 analog input pins, a USB connection, A Power barrel jack, an ICSP header and a reset button.

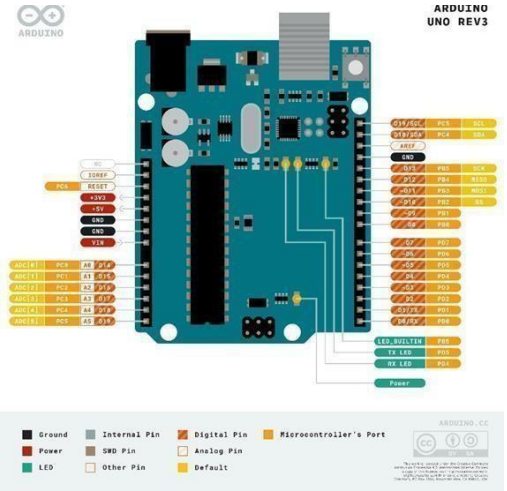

Fig.1: Arduino UNO

4.1.2.1 How to use Arduino UNO

The 14-digital input/output pins can be used as input or output pins by using pin Mode (), digital Read () and digital Write () functions in Arduino programming. Each pin operates at 5V and can provide or receive a maximum of 40mA current and has an internal pull-up resistor of 20-50 K Ohms which are disconnected by default. Out of these 14 pins, some pins have specific functions aslisted below:

- **Serial Pins 0 (Rx) and 1 (Tx):** Rx and Tx pins are used to receive and transmit TTL serial data. They are connected with the corresponding ATmega328P USB to TTL serial chip.
- **External Interrupt Pins 2 and 3:** These pins can be configured to trigger an interrupt on a low value, a rising or falling edge, or a change in value.
- **PWM Pins 3, 5, 6, 9 and 11:** These pins provide an 8-bit PWM output by using analog Write function.

- **SPI Pins 10 (SS), 11 (MOSI), 12 (MISO) and 13 (SCK):** These pins are used for SPI communication.

- **In-built LED Pin 13:** This pin is connected with an built-in LED, when pin 13 is HIGH –LED is on and when pin 13 is LOW, it's off.

Along with 14 Digital pins, there are 6 analog input pins, each of which provide 10 bits of resolution, i.e., 1024 different values. They measure from 0 to 5 volts, but this limit can be increased by using AREF pin with analog Reference () function.

- Analog pin 4 (SDA) and pin 5 (SCA) also used for TWI communication using Wire library.

Arduino Uno has a couple of other pins as explained below:

- **AREF:** Used to provide reference voltage for analog inputs with analog Reference () function.

- **Reset Pin:** Making this pin LOW, resets the microcontroller.

4.1.2.2 Communication

Arduino can be used to communicate with a computer, another Arduino board or other microcontrollers. The ATmega328P microcontroller provides UART TTL (5V) serial communication which can be done using digital pin 0 (Rx) and digital pin 1 (Tx). An ATmega16U2 on the board channels this serial communication over USB and appears as a virtual port to software on the computer. The ATmega16U2 firmware uses the standard USB Cod Rivers, and no external driver is needed. However, on Windows, a .inf file is required. The Arduino software includes a serial monitor which allows simple textual data to be sent to and from the Arduino board. There aretwo RX and TXLEDs on the Arduino board which will flash when data is being transmitted via theUSB-to-serial chip and USB connection to the computer (not for serial communication on pins 0 and 1). A Software Serial library allows for serial communication on any of the Uno's digital pins. The ATmega328P also supports I2C (TWI) and SPI communication. The Arduino software includes a Wire library to simplify use of the I2C bus.

4.1.2.3 Arduino Uno to ATmega328 Pin Mapping

When ATmega328 chip is used in place of Arduino Uno, or vice versa, the image below shows the pin mapping between the two.

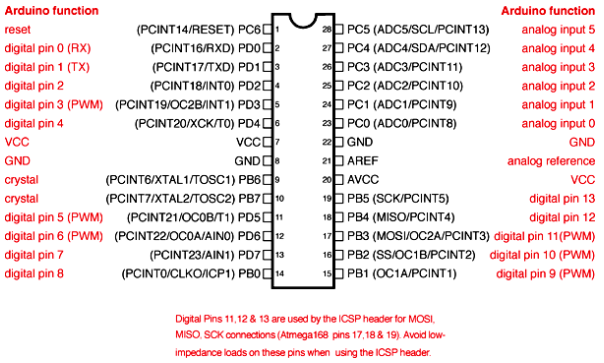

Arduino IDE (Integrated Development Environment) is required to program the Arduino Uno board

The technical specifications of Arduino Mega 2560 is listed in the Table

Microcontroller	ATmega2560
Operating Voltage	5V
Input Voltage (recommended)	7-12 V
Input Voltage (limits)	6-20 V
Digital I/O Pins	54 (of which 14 provide PWM output)
Analog Input Pins	16
DC Current per I/O Pin	40mA
DC Current for 3.3V Pin	50mA
Flash Memory	256 KB of which 8 KB used by bootloader
SRAM	8 KB
EEPROM	4 KB
Clock Speed	16 MHz

Table.1 : Specification of Arduino Mega 2560 is listed

4.1.3 Relay

In shows are a relay is an electrically operated switch. Several relays use a magnet to automatically operates switch, however alternative in operation principles are used, like solid state relays. Relays are used wherever it's necessary to regulate a circuit by a separate low- power signal, or wherever many circuits should be controlled by one signal.

Fig.2: Relay

A relay is basically a switch which is operated by an electromagnet. The electromagnet requires a small voltage to get activated which we will give from the Arduino and once it is activated, it will pull the contact to make the high voltage circuit.

The relay module we are going to use is the5v relay. It runs on 5V/12V, and we can control it with any micro-controller, but we are going to use Arduino.

The Arduino relay module has total of six pins: three on one side and three on other side. On the bottom side, there are three pins which are signal, 5V /12Vand ground. We will connect these pins with the Arduino. While on the other side, there are NC (Normally close), C (Common) and the NO (normally open) which are the output pins of the 5V/12V relay. There, we will connect the output device.

4.1.4 HC-05 - Bluetooth Module

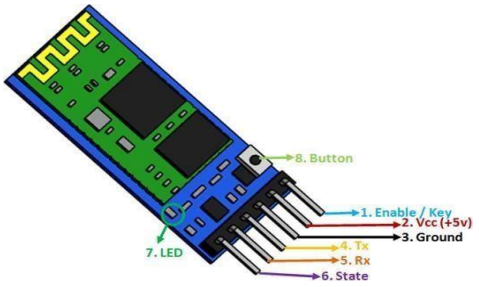

Fig.3: HC-05-Bluetooth Module

The **HC-05** is a very cool module which can add two-way (full-duplex) wireless functionality to your projects. You can use this module to communicate between two microcontrollers like Arduino or communicate with any device with Bluetooth functionality like a Phone or Laptop.

There are many android applications that are already available which makes this process a lot easier. The module communicates with the help of USART at 9600 baud rates hence it is easy to interface with any microcontroller that supports USART. We can also configure the default values of the module by using the command mode. So, if you looking for a Wireless module that could transfer data from your computer or mobile phone to microcontroller or vice versa then this module might be the right choice for you. However, do not expect this module to transfer multimedia like photos or songs; you might have to look into the CSR8645 module for that.

4.1.4.1 How to Use the HC-05 Bluetooth module

The **HC-05** has two operating modes, one is the Data mode in which it can send and receive data from other Bluetooth devices and the other is the AT Command mode where the default device settings can be changed. We can operate the device in either of these two modes by using the key pinas explained in the pin description.

It is very easy to pair the HC-05 module with microcontrollers because it operates using the Serial Port Protocol (SPP). Simply power the module with +5V and connect the Rx pin of the module to the Tx of MCU and Tx pin of module to Rx of MCU as shown in the figure.

Applications of Bluetooth module

1. Wireless communication between two microcontrollers
2. Communicate with Laptop, Desktops, and mobile phones
3. Data Logging application
4. Consumer applications
5. Wireless Robots
6. Home Automation

4.1.5 Bearing with Bearing Cap

The bearings are pressed smoothly to fit into the shafts because if hammered the bearing may develop cracks. Bearing is made upon steel material and bearing cap is mild steel.

Ball and roller bearings are used widely in instruments and machines in order to minimize friction and power loss. While the concept of the ball bearing dates back at least to Leonardo Device, their design and manufacture has become remarkably sophisticated. This technology was brought to its present state of perfection only after a long period of research and development. The benefits of such specialized research can be obtained when it is possible to use a standardized bearing of the proper size and type. However, such bearings cannot be used indiscriminately without a careful study of the loads and operating conditions. In addition, the bearing must be provided with adequate mounting, lubrication, and sealing. Design engineers have usually two possible sources for obtaining information which they can use to select a bearing for their application:

a) Textbooks

b) Manufacturers

Catalogs Textbooks are excellent sources; however, they tend to be overly detailed and aimed at the student of the subject matter rather than the practicing designer. They, in most cases, contain information on how to design rather than how to select a bearing for a particular application.

Manufacturers' catalogs, in turn, are also excellent and contain a wealth of information which relates to the products of the particular manufacturer. These catalogs, however, fail to provide alternatives –which may divert the designer's interest to products not manufactured by them. Our Company, however, provides the broadest selection of many types of bearings made by different manufacturers. For this reason, we are interested in providing a condensed overview of the subject matter in an objective manner, using data obtained from different texts, handbooks, and manufacturers' literature. This information will enable the reader to select the proper bearing in an expeditious manner. If the designer's interest exceeds the scope of the presented material, a list of references is provided at the end of the Technical Section.

4.1.5.1 Construction and Types of Ball Bearings

A ball bearing usually consists of four parts: an inner ring, an outer ring, the balls and the cage or separator.

To increase the contact area and permit larger loads to be carried, the balls run in curvilinear grooves in the rings. The radius of the groove is slightly larger than the radius of the ball, and a very slight amount of radial play must be provided. The bearing is thus permitted to adjust itself to small amounts of angular misalignment between the assembled shaft and mounting. The separator keeps the balls evenly spaced and prevents them from touching each other on the sides where their relative velocities are the greatest. Ball bearings are made in a wide variety of types and sizes. Single-row radial bearings are made in four series, extra light, light, medium, and heavy, for each bore, as illustrated.

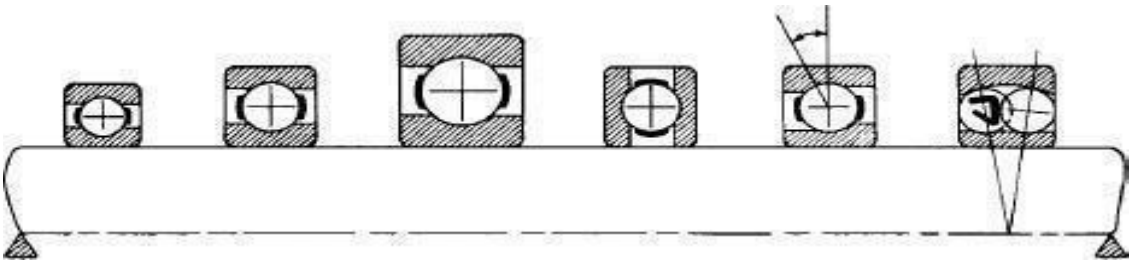

Fig.4: Types of Ball Bearings

The heavy series of bearings is designated by 400. Most, but not all, manufacturers use a numbering system so devised that if the last two digits are multiplied by 5, the result will be the bore in millimeters.

The digit in the third place from the right indicates the series number. Thus, bearing 307 signifies medium-series bearing of 35-mm bore. For additional digits, which may be present in the catalog number of a bearing, refer to manufacturer's details.

Some makers list deep groove bearings and bearings with two rows of balls. For bearing designations of Quality Bearings & Components (QBC), see special pages devoted to this purpose. The radial bearing is able to carry a considerable amount of axial thrust. However, when the load is directed entirely along the axis, the thrust type of bearing should be used. The angular contact bearing will take care of both radial and axial loads. The self- aligning ball bearing will take care of large amounts of angular misalignment

4.1.5 DC Motor

A DC motor is a mechanically commutated electric motor powered from direct current (DC). The stator is stationary in space by definition and therefore so is its current. The current in the rotor is switched by the commentator to also be stationary in space. This is how the relative angle between the stator and rotor magnetic flux is maintained near 90 degrees, which generates the maximum torque.

DC motors have a rotating armature winding but non-rotating armature magnetic field and a static field winding or permanent magnet. Different connections of the field and armature winding provide different inherent speed/torque regulation characteristics. The speed of a DC motor can becontrolled by changing the voltage applied to the armature or by changing the field current. The introduction of variable resistance in the armature circuit or field circuit allowed speed control. Modern DC motors are often controlled by power electronics systems called DC drives.

The introduction of DC motors to run machinery eliminated the need for local steam or internal combustion engines, and line shaft drive systems. DC motors can operate directly from rechargeable batteries, providing the motive power for the first electric vehicles. Today DC motors are still found in applications as small as toys and disk drives, or in large sizes to operate steel rolling mills and paper machines

4.1.6.1 Principles of Operation of DC Motor :

In any electric motor, operation is based on simple electromagnetism. A current-carrying conductor generates a magnetic field; when this is then placed in an external magnetic field, it will experience a force proportional to the current in the conductor, and to the strength of the external magnetic field. As you are well aware of from playing with magnets as a kid, opposite (North and South) polarities attract, while like polarities (North and North, South and South) repel. The internal configuration of a DC motor is designed to harness the magnetic interaction between a current-carrying conductor and an external magnetic field to generate rotational motion. Let's start by looking at a simple 2-pole DC electric motor (here red represents a magnet or winding with a "North" polarization, while green represents a magnet or winding with a "South" polarization).

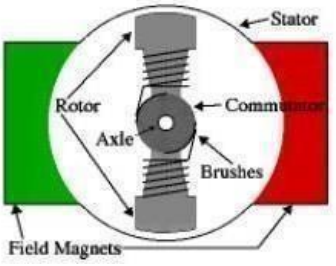

Fig 5: DC motor

Every DC motor has six basic parts -- axle, rotor (a.k.a., armature), stator, commutator, field magnet(s), and brushes. In most common DC motors (and all that Beamers will see), the external magnetic field is produced by high-strength permanent magnets1. The stator is the stationary part of the motor -- this includes the motor casing, as well as two or more permanent magnet pole pieces. The rotors (together with the axle and attached commutator) rotate with respect to the stator. The rotor consists of windings (generally on a core), the windings being electrically connected to the commutator. The above diagram shows a common motor layout -- with the rotor inside the stator (field) magnets. The DC Motors operate at 12 Volts and have the specification of 60 rotations per minute. In our project they are responsible for the movement of the Agribiont and to perform harvesting and seed dropping.

4.1.6 Battery

In isolated systems away from the grid, batteries are used for storage of excess solar energy converted into electrical energy. The only exceptions are isolated sunshine load such as irrigation pumps or drinking water supplies for storage. In fact, for small units with output less than one kilowatt. Batteries seem to be the only technically and economically available storage means. Since both the photo-voltaic system and batteries are high in capital costs. It is necessary that the overall system be optimized with respect to available energy and local demand pattern. To be economically attractive the storage of solar electricity requires a battery with a particular combination of properties:

- Low cost
- Long life
- High reliability
- High overall
- efficiency Low
- discharge Minimum
- maintenance Ampere

We use lead acid battery for storing the electrical energy from the solar panel for lighting the street and so about the lead acid cells are explained below.

4.1.7.1 Lead-Acid Wet Cell

Where high values of load current are necessary, the lead-acid cell is the type most commonly used. The electrolyte is a dilute solution of sulfuric acid (H_2SO_4). In the application of battery power to start the engine in an auto mobile, for example, the load current to the starter motors typically 200 to 400A. One cell has a nominal output of 2.1V, but lead-acid cells are often used in a series combination of three for a 6-V battery and six for a 12-V battery.

The lead acid cell type is a secondary cell or storage cell, which can be recharged. The charge and discharge cycle can be repeated many times to restore the output voltage, as long as the cell is in good physical condition. However, heat with excessive charge and discharge currents short ends the useful life to about 3 to 5 years for an automobile battery. Of the different types of secondary cells, the lead- acid type has the highest output voltage, which allows fewer cells for a specified battery voltage.

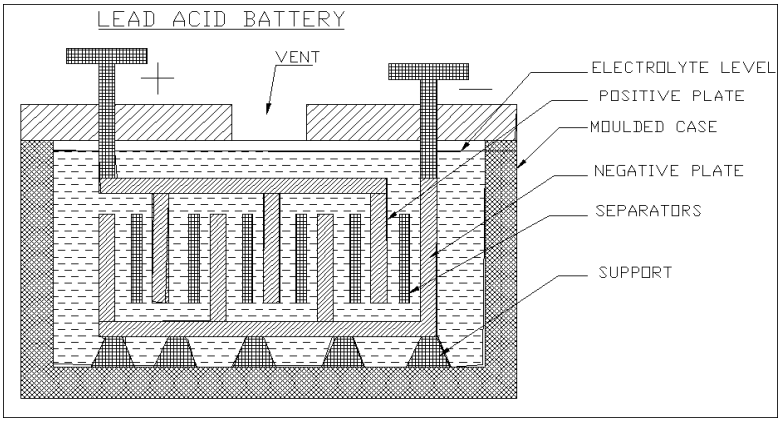

Fig 6: Lead Acid Battery

4.1.8 Frame Stand

This is made up of M.S. This is used as a body of the vehicle. The front and rear wheels are fitted bellow this bottom frame with the help of end bearings.

4.1.8.1 Mild Steel

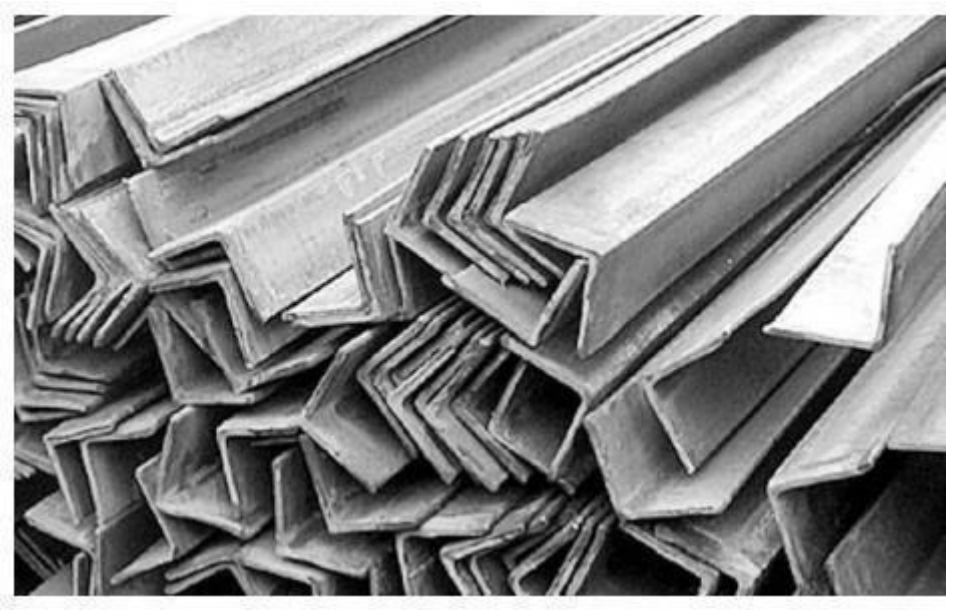

Fig 7: Mild Steel

Mild steel is a carbon steel typically with a maximum of 0.25% Carbon and 0.4%-0.7% manganese, 0.1%-0.5% Silicon and some + traces of other elements such as phosphorous, it may also contain lead (free cutting mild steel) or Sulphur (again free cutting steel called desulphurized mild steel) The stuff is used everywhere, looking out of my office window I can see diesel pump injector parts, loudspeaker pole pieces, Automated packing machinery parts and I haven't even got my glasses on. How it’s made and more info, depending upon the age of your son it's probably an idea he spends a Saturday morning at the local library researching his homework. Whilst the internet’s good you still can't beat browsing through books at the library for homework.

4.1.8.2 Nut And Bolt

Fig 8: Nut and Bolt

A nut is a type of fastener with a threaded hole. Nuts are almost always used in conjunction with mating bolt to fasten two or more parts together. The two partners are kept together by a combination of their threads' friction (with slight elastic deformation), a slight stretching of the bolt, and compression of the parts to be held together. In applications where vibration or rotation may work a nut loose, various locking mechanisms may be employed: lock washers, jam nuts, specialist adhesive thread-locking fluid such as Loctite, safety pins (split pins) or lock wire in conjunction with castellated nuts, nylon inserts (Nylon nut), or slightly oval- shaped threads. The most common shape is hexagonal, for similar reasons as the bolt head - 6 sides give a good granularity of angles for a tool to approach from (good in tight spots), but more (and smaller) corners would be vulnerable to being rounded off. It takes only 1/6th of a rotation to obtain the next side of the hexagon and grip is optimal. However, polygons with more than 6 sides do not give the requisite grip and polygons with fewer than 6 sides take more time to be given a complete rotation. Other specialized shapes exist for certain needs, such as wing nuts for finger adjustment and captive nuts (e.g., cage nuts) for inaccessible areas.

4.1.9 Arc Weld

Fig 9: Arc Weld

Arc welding is a process that is used to join metal to metal by using electricity to create enough heat to melt metal, and the melted metals when cool result in a binding of the metals. It is a type of welding that uses a welding power supply to create an electric arc between an electrode and the base material to melt the metals at the welding point. They can use either direct (DC) or alternating (AC) current, and consumable or non-consumable electrodes. The welding region is usually protected by some type of shielding gas, vapor, or slag. Arc welding processes may be manual, semi-automatic, or fully automated. First developed in the late part of the 19th century, arc welding became commercially important in shipbuilding during the Second World War. Today it remains an important process for the fabrication of steel structures and vehicles.

4.1.9.1 Arc Weld Equipment

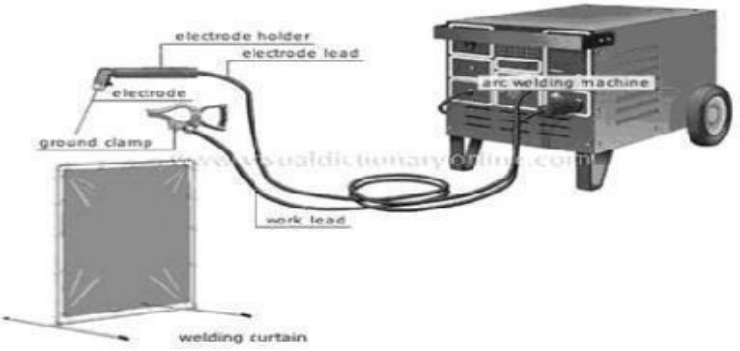

Fig 10

Welding is the joining of metals through coalescence by the use of either heat or pressure or both. Coalescence is a term that means the joining of two materials to become as one piece. The basic arc welder components consist of the machine that generates the power, the electrode holder or wire feed gun, a means of shielding the weld as it forms, and protective equipment for the user. The process begins in all types when the wire or rod makes contact with the piece to be welded. This completes an electric circuit and creates an arc through which the transfer of the metal from the wire or rod to the piece is facilitated. Spatter occurs during transfer; some of the molten drops of metal become airborne and cover the piece and surrounding area with small globules that solidify on cooling. Spatter may be minimized depending on the skill of the operator and the welding method being used.

Corrosion Prevention

The following methods are used for corrosion prevention of the various components of the Multipurpose sowing machine.

Rust Cleaning

Oxidation creates a scale formation on the surface of the material. Scale formation gives rough structure of surface of iron oxide. This iron oxide formation penetrates into the surface and makes the metal weak and reduces the life of the components. Different grades of emery sheets are used to remove the rust formed on the surface of the steel and cleaned properly.

Red Oxide Coating

This Red Oxide Paint Coating is to prevent the action of corrosion and protect the Surface of the components from atmospheric corrosion. Red Oxide Paint and Thinner liquid are mixed in proper proportion and coated on the surface.

Finish Coating

Milky white color paint is applied over the surface of the machine after the application of the above coatings in a smooth manner using a paint sprayer. This final finish coating of the milky white color of the paint gives good pleasing appearance and effective corrosion prevention.

4.2 Factors Determining the Choice of Materials

The various factors which determine the choice of material are discussed below.

1. Properties: The material selected must possess the necessary properties for the proposed application. The various requirements to be satisfied can be weight, surface finish, rigidity, ability to withstand environmental attack from chemicals, service life, reliability etc.

The following four types of principle properties of materials decisively affect their selection.

- Physical
- Mechanical
- From manufacturing point of view
- Chemical

The various physical properties concerned are melting point, Thermal Conductivity, Specific heat, coefficient of thermal expansion, specific gravity, electrical Conductivity, Magnetic purposes etc. The various Mechanical properties Concerned are strength in tensile, compressive shear, bending, torsion and buckling load, fatigue resistance, impact resistance, elastic limit, endurance limit, and modulus of elasticity, hardness, wear resistance and sliding properties.

The various properties concerned from the manufacturing point of view are.

- Cast Ability
- Weld Ability
- Forge Ability
- Merchantability
- Deep Drawing
- Surface Properties
- Shrinkage

2. Manufacturing Case:

Sometimes the demand for lowest possible manufacturing cost or surface qualities obtainable by the application of suitable coating substances may demand the use of specialmaterials.

3. Quality Required:

This generally affects the manufacturing process and ultimately the material. For example, it would never be desirable to go for casting of a smaller number of components which can be fabricated much more economically by welding or hand forging the steel.

4. Availability of Material:

Some materials may be scarce or in short supply. It then becomes obligatory for the designer to use some other material which though may not be a perfect substitute for the material designed.

5. Space Consideration:

Sometimes high strength materials have to be selected because the forces involved are high and the space limitations are there.

6. Cost:

As in any other problem, in selection of material the cost of material plays an important part and should not be ignored. Sometimes factors like scrap utilization, appearance, and non- maintenance of the designed part are involved in the selection of proper materials.

4.3 Types of loads acting on the chassis.

Friction

Reducing friction in bearings is often important for efficiency, to reduce wear and to facilitate extended use at high speeds and to avoid overheating and premature failure of the bearing. Essentially, a bearing can reduce friction by virtue of its shape, by its material, or by introducing and containing a fluid between surfaces or by separating the surfaces with an electromagnetic field.

- By shape, gains advantage usually by using spheres or rollers, or by forming flexure bearings.

- By material, exploits the nature of the bearing material used. (An example would be using plastics that have low surface friction.)

- By fluid, exploits the low viscosity of a layer of fluid, such as a lubricant or as a pressurized medium to keep the two solid parts from touching, or by reducing the normal force between them.

- By fields, exploits electromagnetic fields, such as magnetic fields, to keep solid parts from touching. Combinations of these can even be employed within the same bearing. An example of this is where the cage is made of plastic, and it separates the rollers/balls, which reduce friction by their shape and finish

Loads

Bearings vary greatly over the size and directions of forces that they can support. Forces canbe predominately radial, axial (thrust bearings) or bending moments perpendicular to the main axis.

Play

Some applications apply bearing loads from varying directions and accept only limited play or "slop" as the applied load changes. One source of motion is gaps or "play" in the bearing. For example, a 10 mm shaft in a 12 mm hole has 2 mm play. Allowable play varies greatly depending on the use. As example, a wheelbarrow wheel supports radial and axial loads. Axial loads may be hundreds of Newton's forces left or right, and it is typically acceptable for the wheel to wobble by as much as 10 mm under the varying load. In contrast, a lathe may position a cutting tool to ±0.02mm using a ball lead screw held by rotating bearings. The bearings support axial loads of thousands of Newtons in either direction, and must hold the ball lead screw to ±0.002 mm across that range of loads.

Stiffness

A second source of motion is elasticity in the bearing itself. For example, the balls in a ball bearing are like stiff rubber, and under load deform from round to a slightly flattened shape. The race is also elastic and develops a slight dent where the ball presses on it. The stiffness of a bearing is how the distance between the parts which are separated by the bearing varies with applied load. With rolling element bearings this is due to the strain of the ball and race. With fluid bearings it is due to how the pressure of the fluid varies with the gap (when correctly loaded, fluid bearings are typically stiffer than rolling element bearings).

4.4 Block Diagram

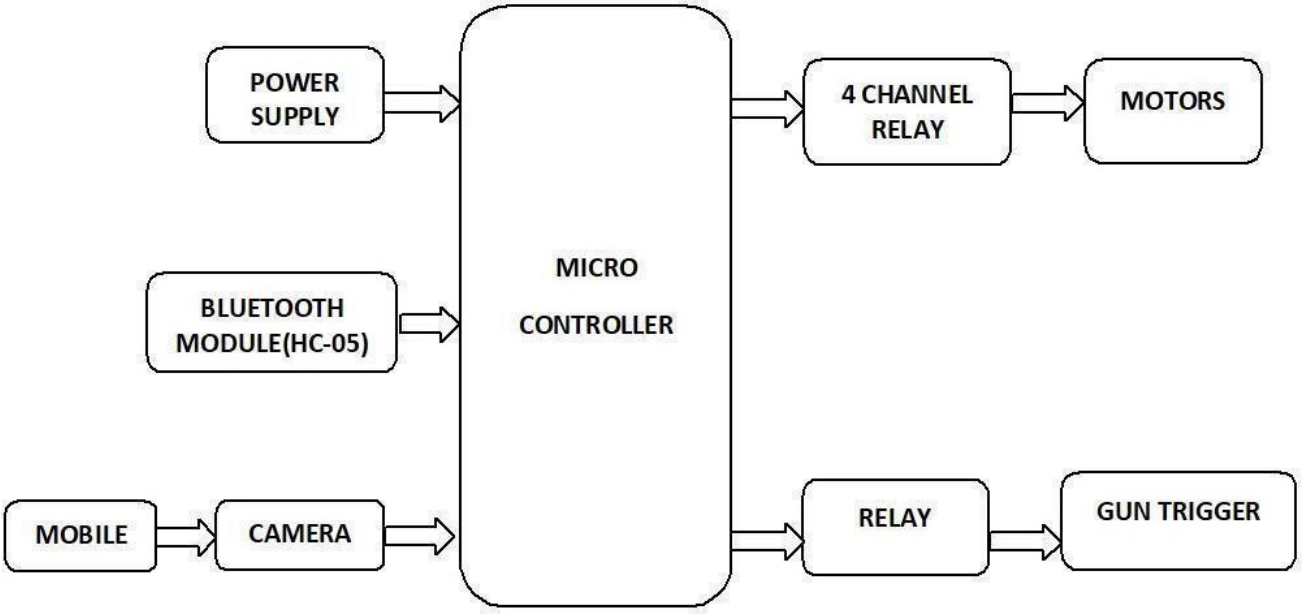

Fig:11: Proposed block diagram

Working

Robot for military application is our project, which deals with remote operation with the help of motorized arm. The circuit can be used to remotely controlled robot electronic gadgets connected to it. The control is done without any wire connection but be means of radio waves, like BLUETOOTH remote control. The focus of this project is to enable ease in operating different operation and gives emphasis on using BLUETOOTH waves. All operations controlled using mobile using android Bluetooth application.

The BLUETOOTH module is used for control robot. ANDROID APP used as remote. it is used for sending command for control robot. In receiver Bluetooth module receive the command using microcontroller; here relays are used for control motor. The BLUETOOTH receiver circuit is having 8 relays. They are used to control.

4.1.10 Relay 1-Forward Direction

4.1.11 Relay 2-Reverse Direction

4.1.12 Relay 3-Left Turn

4.1.13 Relay 4-Right Turn

4.1.14 Relay 5-Arm in clockwise direction

4.1.15 Relay 6-Arm in Anticlockwise direction

4.1.16 Relay 7-Arm up

4.1.17 Relay 8-arm down

The vehicle path is controlled by the remote control. The gun is fixed to the top of the vehicle. In our project cordless video gun is used. Here remote means Bluetooth app it is used by mobile.

4.5 Working Methodology

The construction of remote-controlled video analyzing car consists of a frame which is used for mounting the components such as D.C motor, Battery and gear wheel. The front and back wheels are fitted in the base of the frame. The front wheel is fixed by the bolt and nut. The rear wheel is fitted with the help of shaft, bearings and bearing cap. The gear wheel (spur) is fixed in this shaft for front and backward movement of the vehicle. The D.C motor is coupled with this back wheel gear arrangement with proper welding. Another D.C motor is coupled with rack and pinion arrangement of the front wheel.

The power for driving the motor is taken from the battery. The battery is charged through solar panel. The diode is used during the charging of battery. The diode allows current only in forward direction. The lead acid D.C 12 Volt battery is used for our project.

The receiver circuit is fixed inside the vehicle. The receiver having four relays. These relays output is connected to the D.C motor. The BLUETOOTH transmitter is kept outside the vehicle due to remote operation.

4.6 Design Drawing and Calculation

ISOMETRIC VIEW

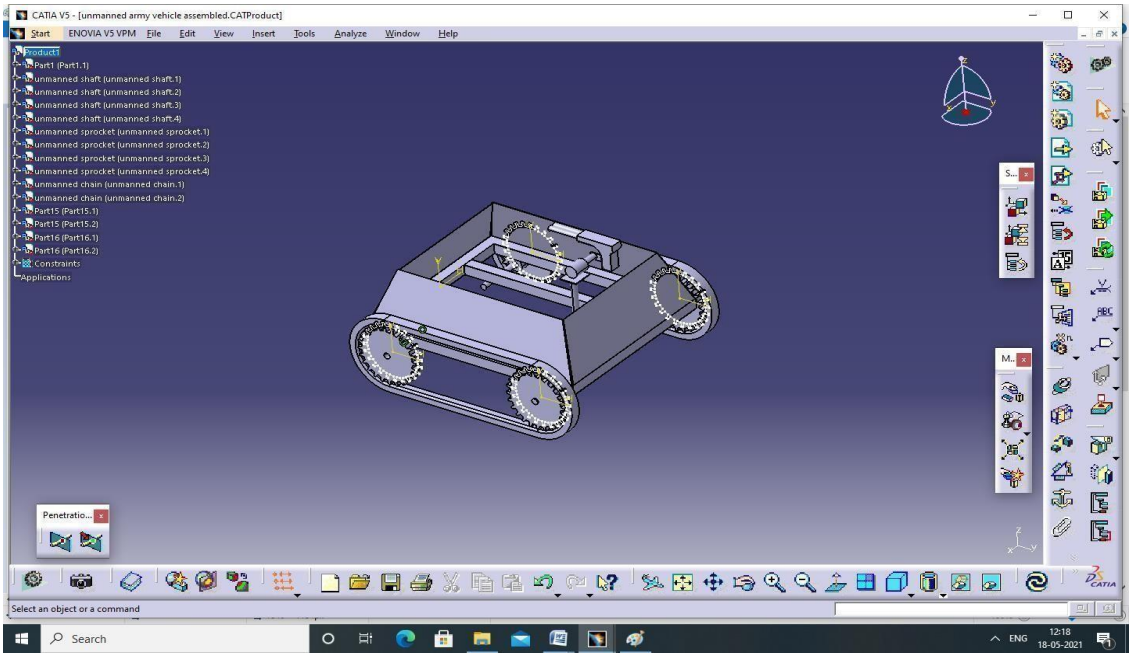

SIDE VIEW

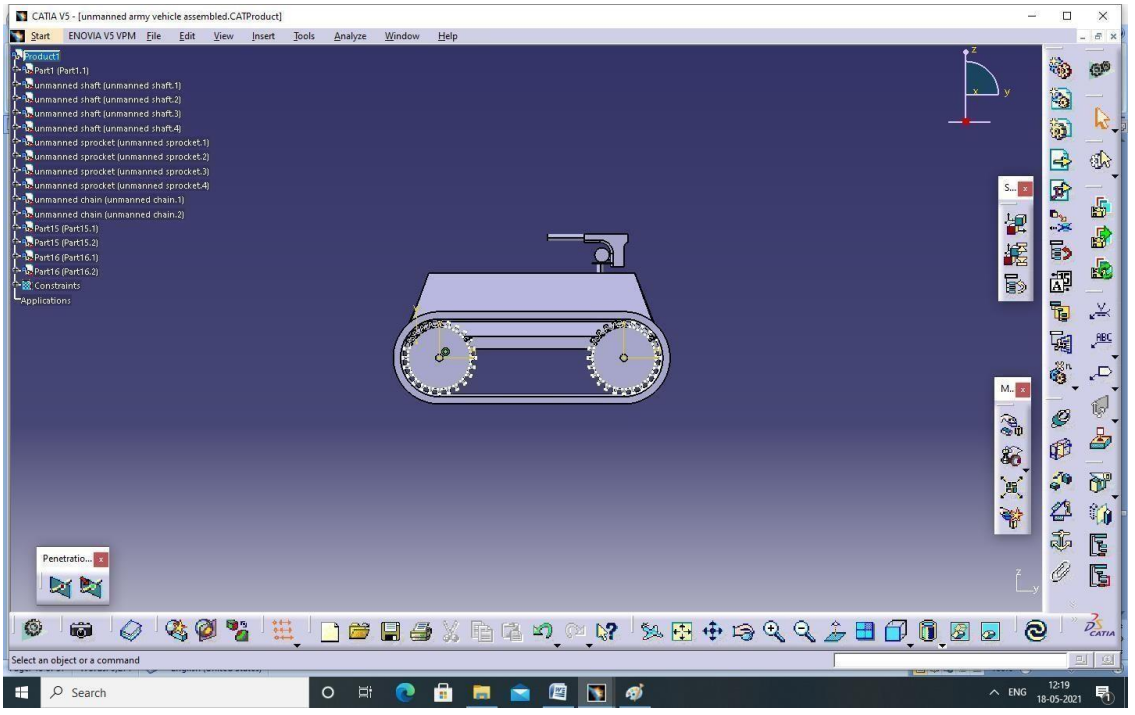

RIGHT VIEW

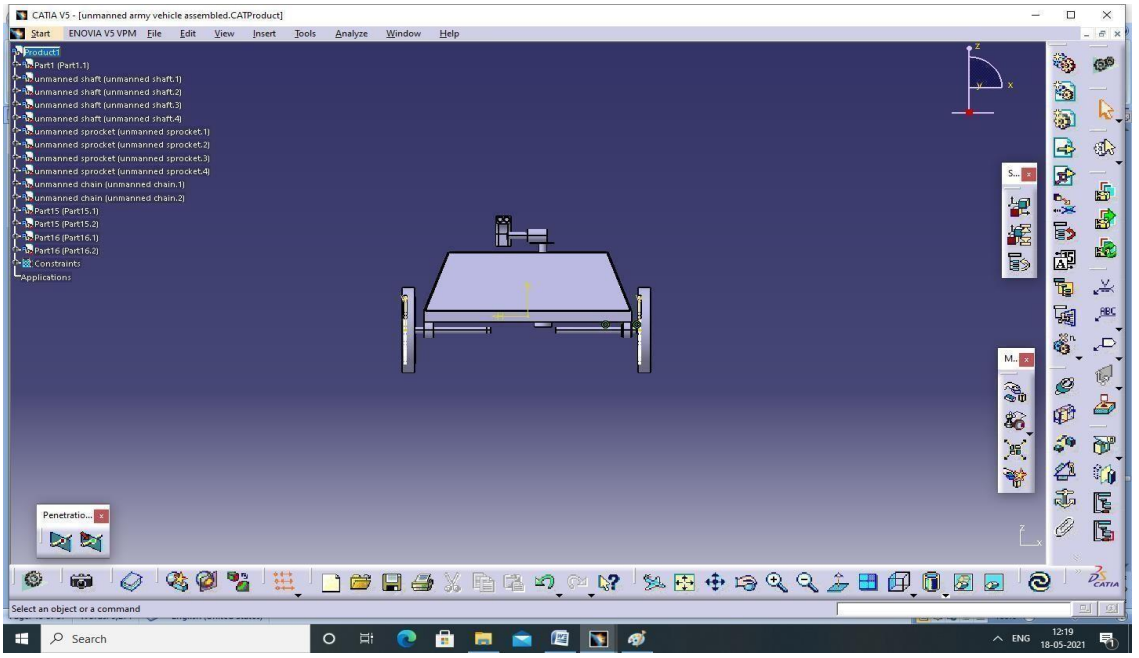

TOP VIEW

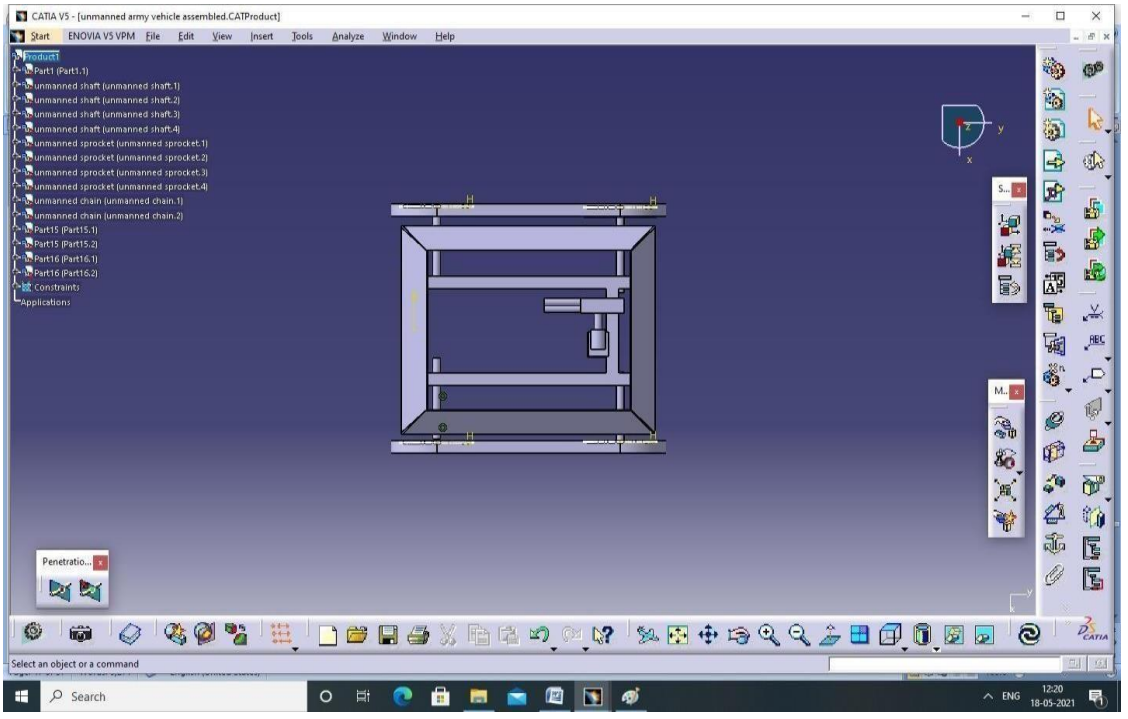

4.7 Calculation and Specification

4.7.1 Technical Specification

- Technical specification of the battery: -

  Weight of battery : 2kg Output

  power : 12v 7.5 amps

  Operating voltage : 12v 1amp

  Current : 1 to 1.5amps

- Specification of motor: -

  Weight of motor : 1kg

  Operating power required: 12v 1amps

  Operating voltage : 12v

  Operating current : 1 amps

  Motor speed : 80 rpm

- Specification of frame: -

  Dimensions : 20 x 30 inch

  Material : mild steel

  size: : 1-inch

  square pipe guage:18 gauge

- Specification of shaft: -

  Dimensions : 15 mm

  Material : mild steel

- Specification of sheet metal: -

  Size :20 x 9, 2nos

  30 x 9, 2 nos

  Gauge: 18 gauge

- Specification of ball bearing: -

  Material : HSS

  Dimensions : inner dia:

  15mmOuter dia : 40mm

- Specification of flat: -

  Dimensions : 1 inch width and 5mm thickness

  Material : mild steel

- Specification of wheel: -

  Dimensions : 5-inch dia

  Material : HSS

4.7.2 Basic Shaft Design Formula

The drive shaft with multiple pulleys experiences two kinds of stresses, bending stress and shear stress. The maximum bending stress generated at the outer most fiber of the shaft. And on the other hand, the shear stress is generated at the inner most fiber. Also, the value of maximum bending stress is much more than the shear stress. So, the design of the shaft will be based on the maximum bending stress and will be driven by the following formula:

Maximum bending stress **Tb = (M * r) / I ..... Eqn.1.**

Where,

M is maximum bending moment on the shaft.

r is the radius of the shaft.

I is area moment of inertia of the shaft.

Design Procedure

Draw the bending moment diagram to find out the maximum bending moment (M) on the shaft.

Calculate the area moment of inertia (I) for the shaft.

Replace the maximum bending stress (Tb) with the given allowable stress for the shaft material.

4.7.3 Shaft Design Problem

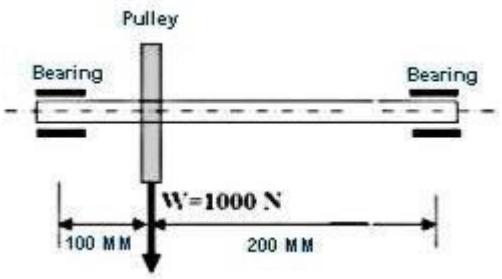

Fig.12

Refer the above picture, where a steel shaft is supported by two bearings and a pulley is placed in between the bearings. You have to design the shaft. Weight of the pulley is 1000 N.

Input data:

Maximum allowable shear stress for the shaft material= 40 N/mm2Maximum bending stress

Tb=(M*r)/I……eqn.1

Solution:

From the bending moment diagram, the maximum bending moment (M) is calculated as 66666.67 N/mm2.Area moment of inertia (**I**)of the circular shaft is:

I = pi * r^4 *0.25

= 0.785*r^4 …….eqn.1.2

From **eqn1.1** we can write:

40 = (66666.67 *r)/ (0.785*r^4)

r= 12.85 mm

So, the minimum radius of the shaft should be **12.85 or 13 mm**

So , Diameter of the shaft =15 mm

Allowable stress for mild steel **Fs =34 N/mm^2**.

Speed of shaft can be calculated from this equation N2 = 133 rpm.

Power produced

P = 2*3.142*N*T/60

231.02 =

2*3.142*133*T/60T

=2207.19/133

=16.595 N-m

Torque maximum

=3.1242*fs*d^3/16153.14*fs*1531

fs = 25.054

Fs>fs

Hence the design is safe.

Angle of Twist:

D = 15mm L = 300mm

N = 133rpm

P = 180N-m = 180×10^3 Nmm/sec

G = 80Gpa = 80×10^5N/mm^2 (Steel - A36 Material)

J = πd^3/32

= 3.142×15^3/ 32

= 331.38mm

P = 2πNT/ 60 = 180×10^3

= 2×3.142×133×T /60

T= 12923.860 Nm

Therefore, Torque available at axial

T = 12923.860 Nm

T= 12923860 N-mm

Using Torsional formula

$$\frac{T}{\theta J} = \frac{\theta}{r} = \frac{G}{L}$$

Maximum Shear stress occurs at surface where

(r)d = 15mm

r = 7.5mm

g_θ = T ×r/J

=12923860×7.5 / 331.38

= 1.1658 N/mm^2

Angle of Twist (θ)

$$\theta = \frac{TL}{GJ}$$

$$= 12923860 \times \frac{300}{80 \times 331.38 \times 10^5}$$

= 1.48 degree

= 0.025 radian

4.7.4 Chain drive

Roller Chain Dimensions:

Power =180w=0.18kw

Speed = 133rpm

Roller Chain = 06B (Design of Machine elements "V B BHANDARI" table no 21.5)

06B-1 Roller Chain Dimensions

Pitch P= 9.525mm

Width W =5.72mm

Diameter =6.35mm

Length f = 6.10mmn (website: fbchain.com)

Power to produce

P = 0.23KN

Speed of sprocket 1 N_1=133rpm

Speed of sprocket 2 N_2=133rpm

Velocity ratio of the drive $R=N_1/N_2=133/133=1$ (From table 21.2 P.Kannaiah)

No of teeth of sprocket (pinion) for the velocity ratio of 1 is taken as 60

$Z_1=60$

No of teeth of sprocket gear $Z_2 = Z1*R = 60*1 = 60$

Design Power = Rated power*K_s

Where $K_s = K_1*K_2$

K_1=1.25(Assuming variable load with mild steel)

K_2=1(Assuming drop lubrication) $K_s=K_1*K_2=1.25*1=1.25$

Design power P1= rated power*K_s=0.23*1.25=0.287KN (From table 21.2)

Pitch P=12.7mm

Diameter of sprocket Di = 100.33mm

Velocity of chain $V = \pi*D_1*N_1/60$

$= \pi *100.33*133/60$

Velocity of chain = 0.69m/s

4.8 Material And Cost Estimation

4.8.1 List Of Materials

SL. NO.	NAME OF THE PARTS	MATERIAL	QUANTITY
1	BLUETOOTH transmitter circuit	Electronic	1
2	D.C. Motor (12 V)	Aluminum	4
3	Bearing with bearing cap	Steel	4
5	Battery	Lead-acid	1
6	Frame	M.S	1
7	Connecting Wire	Cu	2 meters
8	Bolt & Nut	M.S	12
9	Shaft	M.S	1
10	Chain and sprocket	M.S	1
11	Controller unit	Electronics	1

Table 1.2: List of Material

4.9 Expected Cost Estimation

4.9.1 Materials Cost

SL. NO.	NAME OF THE PARTS	MATERIAL	QUANTITY	AMOUNT (Rs)
1	BLUETOOTH	Electronic	1	800/-
2	D.C. Motor 12v 2amps	Aluminum	3	2400/-
3	Bearing with bearing cap	Steel	6	480/-
4	Frame	MS	1	1500/-
5	Spur gears	HS	2	1200/-
6	Shaft	M.S	1	350/-
7	Connecting Wire	Cu	2 meters	200/-
8	Bolt & Nut	M.S	12	150/-
9	Chain and sprocket	M.S	4	1800/-
10	Controller unit	ece	1	3500/-
11	Battery	Lead acid	1	1100/-
12	Ejector	cu	1	600/-
13	Pellet gun		1	850/-

TOTAL = 14930/-

Table 1.3: Cost Estimation

4.9.2 Labour Cost

LATHE, DRILLING, WELDING, GRINDING, POWER HACKSAW, GAS CUTTING:

Cost = 3500/-

4.9.2 Overhead Charges

The overhead charges are arrived by "Manufacturing cost"

Manufacturing Cost = Material Cost + Labour cost

= 14930 + 3500

= 18430

Overhead Charges = 20% of the manufacturing cost

= 3686/-

4.9.3 Total Cost

Total cost = Material Cost + Labour cost + Overhead Charges

= 14930 + 3500 + 3686

Total cost for this project = 22,116/-

Chapter 5

Results and Discussion

- The working range of this model is <100m
- The maximum force required to pull a trigger varies between 4-5 pounds (8.81849 Pounds -force)
- The model can run with a maximum speed of 1.11m/s

  Distance =100m

  Time taken = 1min 30sec

  Speed = D/T = 100/90 = 1.11 m/s
- The spectrum range of ESP32-CAM varies between 2484 MHz
- Once the battery is fully charged this model has the capacity to run for 1.8-2.2 hours

Distance (m)	100	200	300
Time taken (min)	1.11	2	2.82

Chapter 6

Conclusion And Future Scope

6.1 Conclusion

This project work has provided us an excellent opportunity and experience, to use our limited knowledge. We gained a lot of practical knowledge regarding, planning, purchasing, assembling, and machining while doing this project work. We feel that the project work is a good solution to bridge the gates between institution and industries.

We are proud that we have completed the work with the limited time successfully. The **"REMOTE CONTROLLED WEAPON SYSTEM"** is working with satisfactory conditions. We can understand the difficulties in maintaining the tolerances and also quality. We have done to our ability and skill making maximum use of available facilities.

In conclusion remarks of our project work, let us add a few more lines about our impression project work.

Thus, we have developed a **"REMOTE CONTROLLED WEAPON SYSTEM"** which helps to know how to achieve low cost analyzing robot with remote control operation. By using more techniques, they can be modified and developed according to the applications.

6.2 Future scope

1. As our armed forces, military are advancing, it is now time to display robotic weapon system, strengthening our defense and minimizing loss of human life.

2. This can be used for other purposes like tunneling through dark caves in search of terrorists, securing urban streets rifle with sniper fire, patrolling during shelling at war, and land mines, even for surveillance in urban bank lockers.

3. This capability would permit to send unmanned supply convoys, again minimizing human losses.

4. Another way to make military work safer is to send ground robots as pioneers instead of soldiers.

5. The military has recognized that automatic devices are far more efficient than the use of human soldiers, as there is a reduced risk of mistakes, and the devices can also be equipped with powerful weapons.

References

1. Surbhi Verma, “Android App Controlled Bluetooth Robot”.,[1] International journal of Computer Applications (0975-8887). Volume 152-No.9, October 2016
2. R. Hema,” Control Robot with Automatic Firing Gun”., [2] International journal of Engineering and Technology. Volume 4, Issue 6, June 2015.
3. Saurav Biswas, “Control Robot using Android Phone”., [3] IJCSIT International Journal of Robotic Advancements. Volume 6(3), 2015, 2985-2989.
4. Rowjatul Zannat Ishita, “Bluetooth Based Android Controlled Robot”., [4] American Journal of Engineering Research (AJER) e-ISSN:2320-0847 Volume 5, Issue 3, pp-195-199.
5. H.L. A. Hart and john Grader punishment and responsibility: Essays in the philosophy of law. Oxford university press. Ibid, PP.211 237, Newyark,2008.
6. HIN-YAN LIU “leashing the corporate dogs of war” the legal implications of the modern private military company in journal of conflict and security law. Volume15, 210, PP.141 - 168.
7. Ronald Arkin, governing lethal behavior in autonomous Robots, BCO Raton 2009.PP 7 - 27.Ibid.PP.10-14, Su also Armin Krishnan, killer robots, Ashgate, Farnham 2009.
8. Alexander Gillespie, “A history of the law of War” The customer customs and laws of warwith regards to arms control, heart, Oxford 2011.
9. Pater Cane, “Responsibility in law and morality” Oxford University Press, Oxford, 2002.
10. Jonathan Franklin, Whaling: Campaigners use drones in the fight against Japanese whalersin the guardian, 1st January 2012.
11. S.A. Joshi, Aparna Tondarkar, “surveillance robot for military application”0.18535/ijecs/v7i5.10.
12. Sahil bhatnagar1, Shivam Kumar Gola “a review on rough terrain and defense robot10.18535/ijsrm/v4i10.092016.
13. Dilip Kumar, Traunpreet “wireless multifunctional robot for military applications”10.1109/raecs.2015.7453343.

References

14. Surbhi Verma, “Android App Controlled Bluetooth Robot”.,[1] International journal of Computer Applications (0975-8887). Volume 152-No.9, October 2016

15. R. Hema,” Control Robot with Automatic Firing Gun”., [2] International journal of Engineering and Technology. Volume 4, Issue 6, June 2015.

16. Saurav Biswas, “Control Robot using Android Phone”., [3] IJCSIT International Journal of Robotic Advancements. Volume 6(3), 2015, 2985-2989.

17. Rowjatul Zannat Ishita, “Bluetooth Based Android Controlled Robot”., [4] American Journal of Engineering Research (AJER) e-ISSN:2320-0847 Volume 5, Issue 3, pp-195-199.

18. H.L. A. Hart and john Grader punishment and responsibility: Essays in the philosophy of law. Oxford university press. Ibid, PP.211 237, Newyark,2008.

19. HIN-YAN LIU “leashing the corporate dogs of war” the legal implications of the modern private military company in journal of conflict and security law. Volume15, 210, PP.141 - 168.

20. Ronald Arkin, governing lethal behavior in autonomous Robots, BCO Raton 2009.PP 7 - 27.Ibid.PP.10-14, Su also Armin Krishnan, killer robots, Ashgate, Farnham 2009.

21. Alexander Gillespie, “A history of the law of War” The customer customs and laws of war with regards to arms control, heart, Oxford 2011.

22. Pater Cane, “Responsibility in law and morality” Oxford University Press, Oxford, 2002.

23. Jonathan Franklin, Whaling: Campaigners use drones in the fight against Japanese whalersin the guardian, 1st January 2012.

24. S.A. Joshi, Aparna Tondarkar, “surveillance robot for military application”0.18535/ijecs/v7i5.10.

25. Sahil bhatnagar1, Shivam Kumar Gola “a review on rough terrain and defense robot10.18535/ijsrm/v4i10.092016.

26. Dilip Kumar, Traunpreet “wireless multifunctional robot for military applications”10.1109/raecs.2015.7453343.